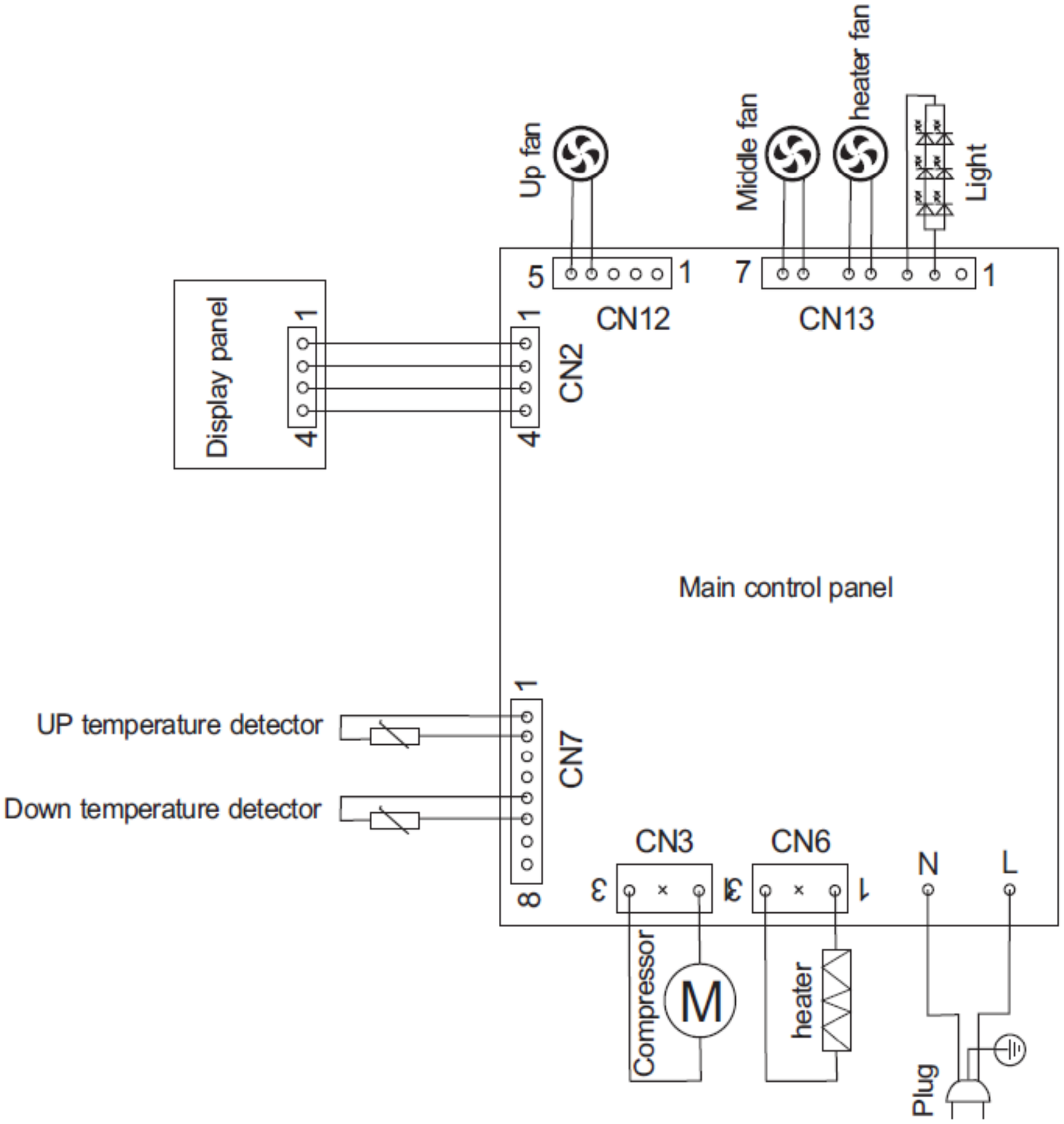
Up fan
Middle fan
heater fan
Light
5
1
7
1
CN12
CN13
Display panel
1
4
1
4
CN2
Main control panel
UP temperature detector
Down temperature detector
1
8
CN7
CN3
CN6
3
3
1
N
L
Compressor
M
heater
Plug